www.asafire.ir

SCORPION POINT REMOTE TESTER
SCORPION ASD REMOTE TESTER

EN User Manual



scorpion®
REMOTE DETECTOR TEST TECHNOLOGY

www.asafire.ir

www.asafire.ir

IMPORTANT INFORMATION

READ THIS USER MANUAL COMPLETELY BEFORE USING YOUR SCORPION SYSTEM. SAVE THIS USER MANUAL - SAVE ALL SAFETY AND OPERATIONAL INSTRUCTIONS FOR FUTURE REFERENCE. TAKE NOTE OF THE CAUTIONS AND WARNINGS - READ CAREFULLY AND FOLLOW ALL WARNING LABELS ON THE PRODUCT AND THOSE DESCRIBED IN THIS USER MANUAL. INSTALLATION OF THE SCORPION SYSTEM MUST NOT OBSTRUCT OR IMPAIR THE OPERATION OF THE FIRE SYSTEM.

THE FOLLOWING SYMBOLS ARE USED THROUGHOUT THIS USER MANUAL AND ON THE PRODUCT:



This symbol on the product indicates that there is a safety hazard or an operation requiring care to avoid damage to the product or environment. You must read the appropriate sections of the User Manual to understand the nature and severity of all the potential hazards present and the action you must take.



This symbol on the product indicates that you should read and understand this User Manual before using this product.



This symbol on the product indicates that this part of the device is susceptible to static damage.



The crossed-out refuse container symbol on this product or literature indicates that it should not be disposed with other business waste at the end of its working life. To help ensure that valuable resources are reused and recycled, and to prevent possible harm to the environment or human health from uncontrolled waste disposal, please separate this from any other types of waste.

⚠ WARNING

This product may be used at height. Exercise great care and always wear appropriate PPE (personal protective equipment) when operating above head height in order to avoid the risk of injury.

⚠ CAUTION

Environment - This product is designed for indoor use only and should not be subject to, or used in, a wet, high humidity or dusty environment. Installation in these environments may reduce the life and/or performance of the system. Scorpion is not designed for use in hazardous areas (those containing explosive vapour or dust). Do not install where insects are likely to interfere with the detector as it is also possible they will interfere with Scorpion in the same way.

Location - Whenever possible, the Scorpion Head Unit should be positioned where there is no movement of air. In situations where there is a draft, position the head unit smoke nozzle 'upwind' of the direction of air flow. In turbulent air the smoke generated may not reach the Point detector or ASD pipe inlet.

Servicing

- There are no user serviceable parts in the Scorpion Head Unit.
- Any attempt to open or tamper with the Head Unit or Controller, other than shown in this manual will invalidate any warranty or claim against No Climb Products Ltd.
- The Scorpion Controllers contain a safety fuse which can be replaced if necessary.

General Advice

- Always allow the equipment to reach ambient temperature before use (e.g. after removing from packaging) to prevent condensation damage.
- If your Scorpion unit becomes damaged do not use it. Switch off immediately and consult technical support.
- Scorpion is not designed for use in hazardous areas (those containing explosive vapour or dust).
- Use only approved accessories that are recommended by the manufacturer.
- The Solo Battery Baton should be removed when Scorpion is not in use. This will prevent gradual discharge of the battery and prevent possible accidental or malicious operation of the head unit.
- Always use a fully charged battery when commissioning the system.

⚠ CAUTION

Stop using Scorpion immediately if you notice any unusual odours; liquids or noise coming from it. Switch off immediately and consult technical support. Do not paint the Head Unit.

⚠ WARNING

Scorpion is not designed for use in hazardous areas (those containing explosive vapour or dust)

⚠ CAUTION

Do not use your Scorpion if it is not operating properly. Consult the Troubleshooting section of this manual, and if required, seek technical advice.

www.asafire.ir

www.asafire.ir

CONTENTS

1 GENERAL INSTRUCTIONS 4
1.1 WARRANTY
1.2 ACKNOWLEDGEMENT
1.3 RECYCLING
1.4 CE DECLARATION
2 PARTS IDENTIFICATION 5
3 APPLICATIONS 6
3.1 INSTALLATION EXAMPLES
4 COMPONTENT PARTS 8
4.1 POINT HEAD UNIT
4.2 ASD HEAD UNIT
4.3 PORTABLE CONTROLLER INTERFACE 9
4.4 WALL CONTROL INTERFACE 10
5 INSTALLATION 11
5.1 HEAD UNITS
5.2 HEAD UNIT WIRING
5.3 CABLING 12
5.4 POINT HEAD INSTALLATION
5.5 POINT HEAD INSTALLTION - DO'S & DONT'S 14
5.6 ASD HEAD UNIT INSTALLATION 16
5.7 ASD HEAD INSTALLATION - DO'S & DONT'S 18
5.8 ACCESS POINT INSTALLATION 19
5.9 WALL CONTROL INSTALLATION
6 USING SCORPION 20
6.1 CHARGING THE BATTERY
6.2 CONNECTING THE BATTERY
6.3 SMOKE & CLEAR TIMES - PORTABLE 21
6.4 TEST & CLEAR TIMES - WALL CONTROL 22
6.5 ENABLING THE TRANSPORT TIMER
6.6 PORTABLE CONTROL TEST PROCEDURE
6.7 WALL CONTROL TEST PROCEDURE
6.8 WARNINGS AND ERRORS
7 TROUBLESHOOTING 24
8 SERVICE & MAINTENANCE 25
8.1 HEAD UNITS
8.2 CONTROLLERS
8.3 BATTERIES & BATTERY CHARGER
9 TECHNICAL SPECIFICATIONS 26
10 TECHNICAL SUPPORT 27

www.asafire.ir

www.asafire.ir

1 GENERAL INSTRUCTIONS

1.1 WARRANTY

In addition to any other express warranty given in writing by the Company in relation to the Goods, the Company warrants that the Goods supplied under these terms and conditions will be in accordance with the specification (if any) contained in the Purchase Order, and will be free from defects in workmanship and material for a period of 18 months from the date of delivery to the Buyer or for a period of 12 months after the date of sale by the Buyer to the final customer whichever period is the shorter.

1.2 ACKNOWLEDGEMENT

Scorpion® is a registered mark of No Climb Products Ltd. All other brand names mentioned are trademarks or registered marks of their respective holders, and are hereby acknowledged.

©2018 No Climb Products Ltd. All Rights Reserved.

1.3 RECYCLING

The packaging can be easily separated into the following materials:

- Cardboard (outer box)
- Cardboard (inner buffers, boxes)
- Polyethylene (bags)
- Plastic / metal (any items or accessories that are not required for a specific installation)

Please dispose in line with local environmental requirements.

WEEE (WASTE ELECTRICAL & ELECTRONIC EQUIPMENT) REGULATIONS

Scorpion components are suitably marked to be recycled in accordance with your local environmental requirements. When supplied as B2B EEE, the provider invokes regulation 9.2 and passes all WEE obligations to the end user.

1.4 DECLARATIONS & CERTIFICATIONS

This product and its associated components are fully compliant with the following:

- CE (including EMC and RoHS)
- UKCA

Further details regarding declarations and certifications are available upon request. Please contact *support@detectortesters.com* for more information.

www.asafire.ir

www.asafire.ir

2 PARTS IDENTIFICATION

Scorpion Point Head Unit Kit
SCORP 1001-001



Scorpion Access Point
SCORP 25-001





Scorpion ASD Head Unit Kit
SCORP 2001-001

Scorpion Wall Mounted Control Panel
SCORP 8000-001



Scorpion Portable Controller
SCORP 7000-001 (Single head units)



Solo Universal Charger



Scorpion Power Kit
SOLO770-001
SCORP60-001





NOTE:
These are used with the Portable Controller (SCORP7000-001). Order 1 for each point detector (SCORP1011-001) or ASD sampling pipe (SCORP2011-001) to be tested.

www.asafire.ir

www.asafire.ir

3 APPLICATIONS

3.1 INSTALLATION EXAMPLES

- Scorpion is designed for use on all point smoke detectors.
- Certain multi-sensor point detectors (combinations of smoke, heat, or CO) cannot be activated by the introduction of a single stimulus. In these cases, Scorpion will not work and a Multi-Stimulus Detector Tester should be used (see: www.detectortesters.com/testifire).
- The head unit can be up to 100m away (cable length) from the Access Point / Wall Mounted Controller depending on the cable type used.
- One Access Point is required for each head unit or the Wall Mounted Controller can be used for up to 8 head units.
- Scorpion is activated by connecting the portable battery (Solo battery baton) to the relevant Scorpion controller.
- The portable controller is connected to the access point (and Scorpion head unit adjacent to the relevant detector) and is used to run a test.
- The Wall Mounted Control Panel only needs a battery connected to provide the power to run a test.

NOTE:
The default smoke generation time is set to 15 seconds. The majority of point and ASD system detectors should activate within this time period. If the detector does not activate refer to section 6.3 of this manual to adjust the timer.

If the detector does not activate after a long period or repeated tests it may be faulty and need replacing.

Always use the shortest time required to activate the detector

Point Installation Example

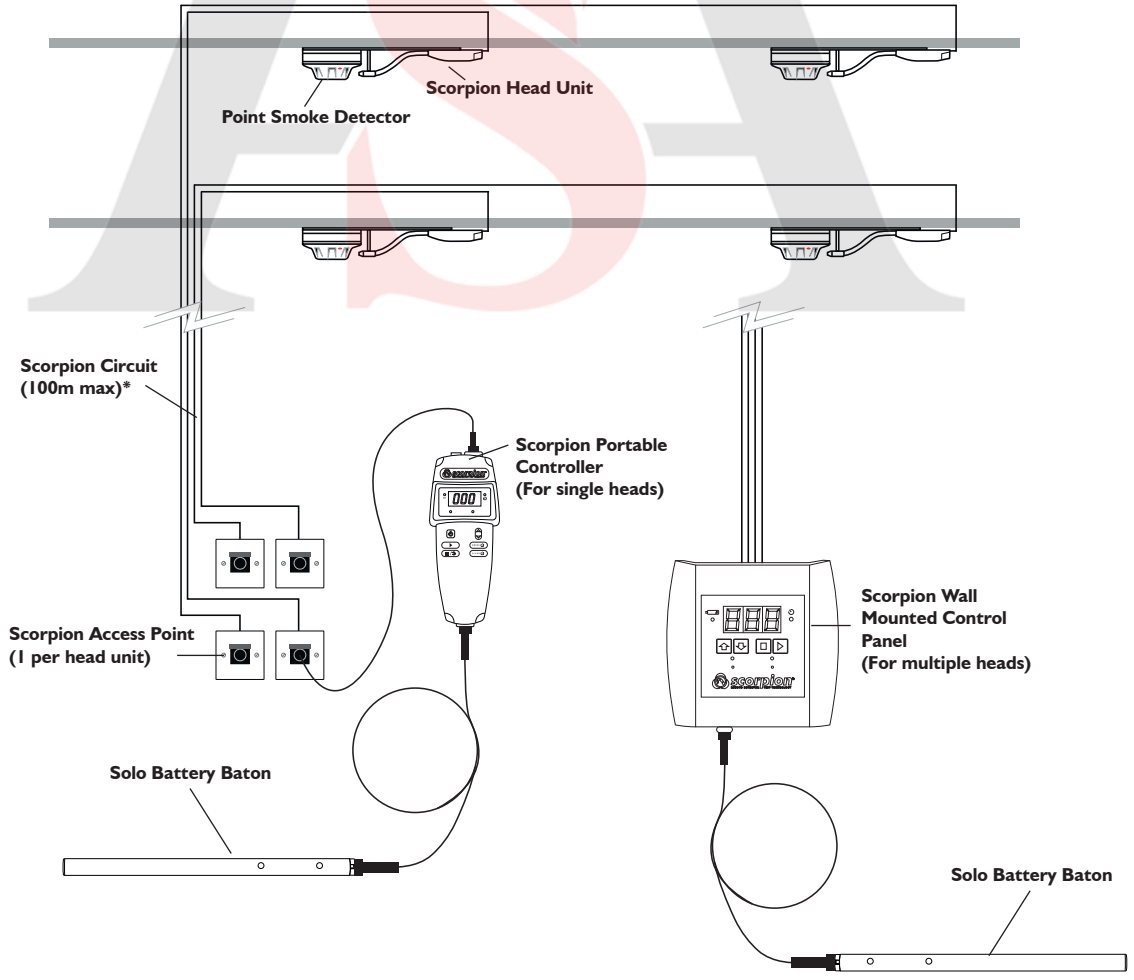

www.asafire.ir

www.asafire.ir

ASD Installation Example

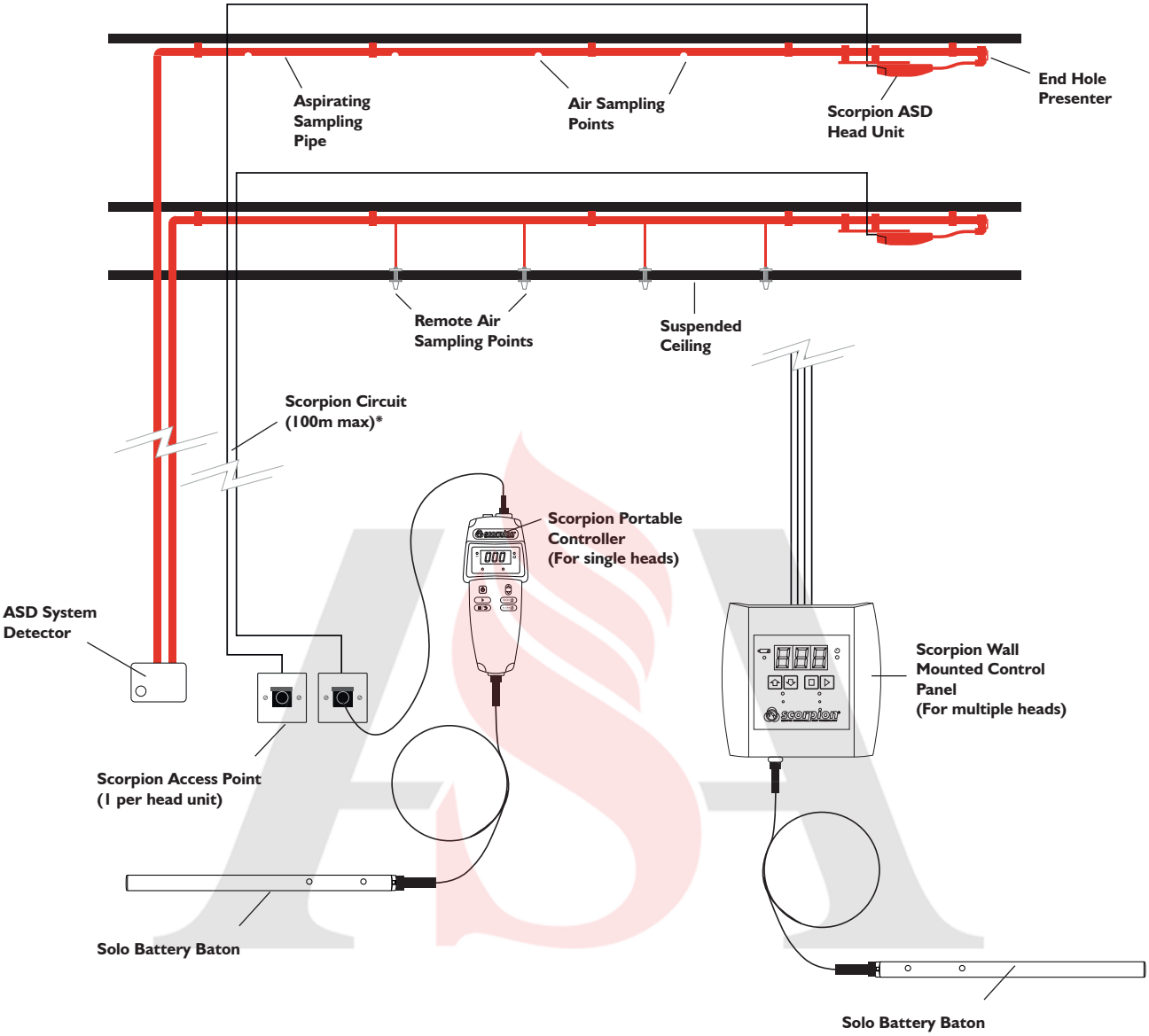

*Depending on cable type.

www.asafire.ir

www.asafire.ir

4 COMPONENT PARTS

4.1 POINT HEAD UNIT

1. Point Head Unit
2. Fuel release
3. Terminal cover
4. Cable removal tool
5. Point bracket (A)
6. Point bracket (B)
7. Point smoke presenter
8. Flexible Tube (Point)
9. Locking ring
10. Smoke Presenter & Bracket Screws (25/35/70mm)

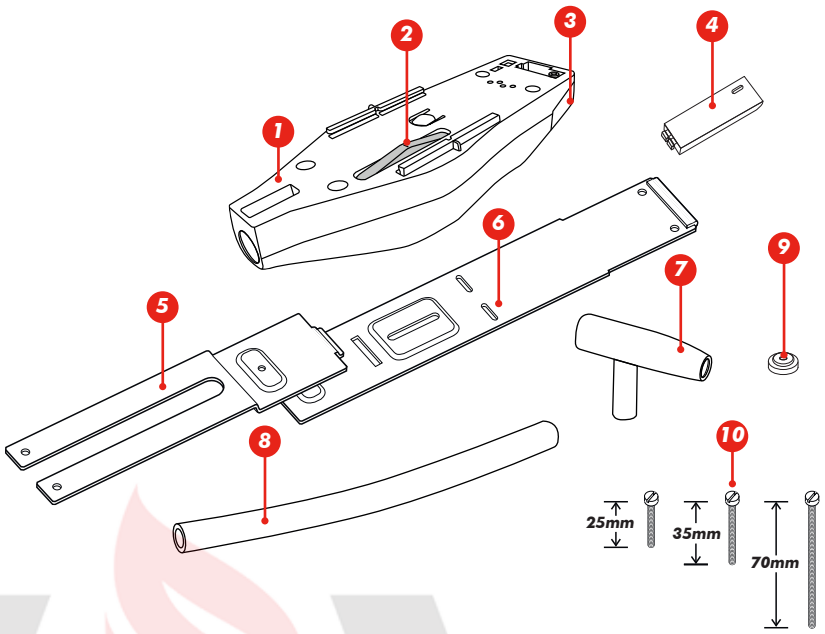

4.2 ASD HEAD UNIT

1. ASD head unit
2. Fuel release
3. Terminal cover
4. Cable removal tool
5. Flexible tube
6. Self-adhesive pads for securing smoke presenters
7. ASD end cap smoke presenter
8. ASD sampling hole smoke presenter
9. ASD pipe clips
10. ASD bracket

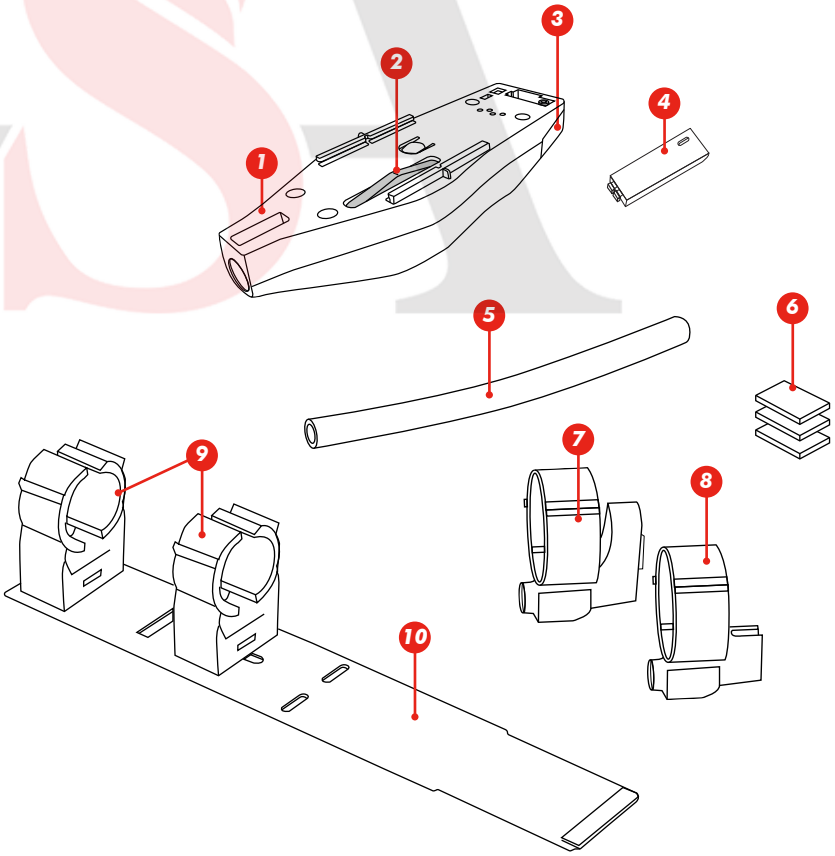

www.asafire.ir

www.asafire.ir

4.3 PORTABLE CONTROLLER INTERFACE

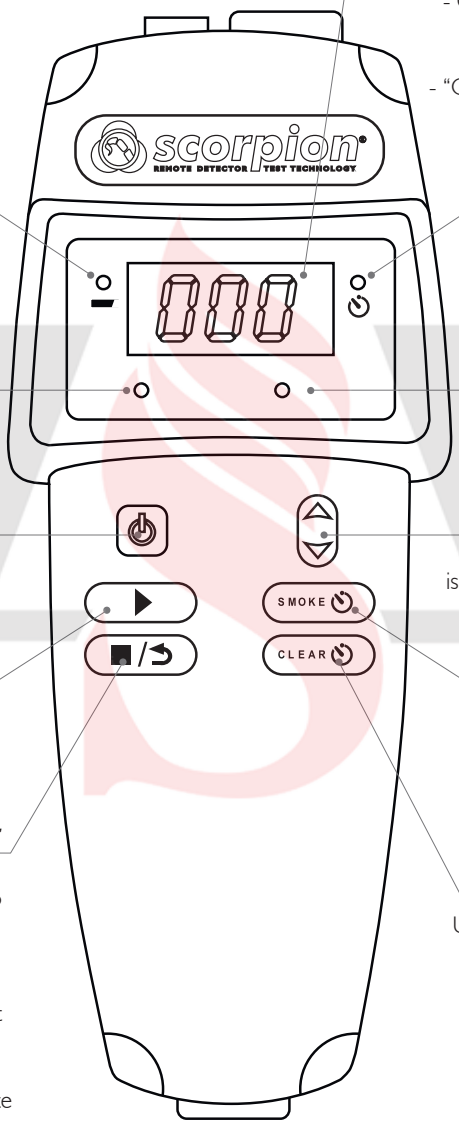

Display

Indicates:
- Firmware version on power-up
- Countdown timer (5 sec.) during warm-up when in Point Detector mode
- Countdown timer (5 sec.) during warm-up followed by Transport Time when in ASD mode (i.e. Transport Timer is active)
- "C" implies incorrect or no cable connection

Battery Status Indicator

Glows Red when battery power is low. Glows Green when battery level is ok.

Transport Timer Status

Lights up when timer is active. The display then indicates the time since smoke generation started.

Smoke Test Status

Test cycle in progress (smoke being generated).

Clearing Status

Clearing (detector purging) in progress.

Power Button

Press and hold to switch the Controller on and off. The Controller will automatically switch off after 10 minutes without use.

Adjust Smoke or Clearing time

When the set smoke or set clear button is pressed: the up button increases the time. The down button decreases the time.

Run Test Button

Used to start a test (smoke generation followed by clearing).

Set Smoke Time

Used to change the smoke duration saved in the controller. Press once to enter the change smoke time function, and again to save the time and exit.

Stop/Exit Button/Transport Timer

Used to stop test (stop smoke generation and start clearing, or to stop clearing, or to stop the timer).

When in Smoke Time or Clear Time function, this exit button takes the user out of the function without saving changes.

Press for 3 seconds to activate or deactivate the transport timer.

Set Clearing Time

Used to change the clearing duration saved in the controller. Press once to enter the change clear time function, and again to save the time and exit.

www.asafire.ir

www.asafire.ir

4.4 WALL MOUNTED CONTROL PANEL INTERFACE

Display

Indicates:
Head Unit number (1 - 8).

Timer (counting up in seconds when the 'time indicator' LED is on).

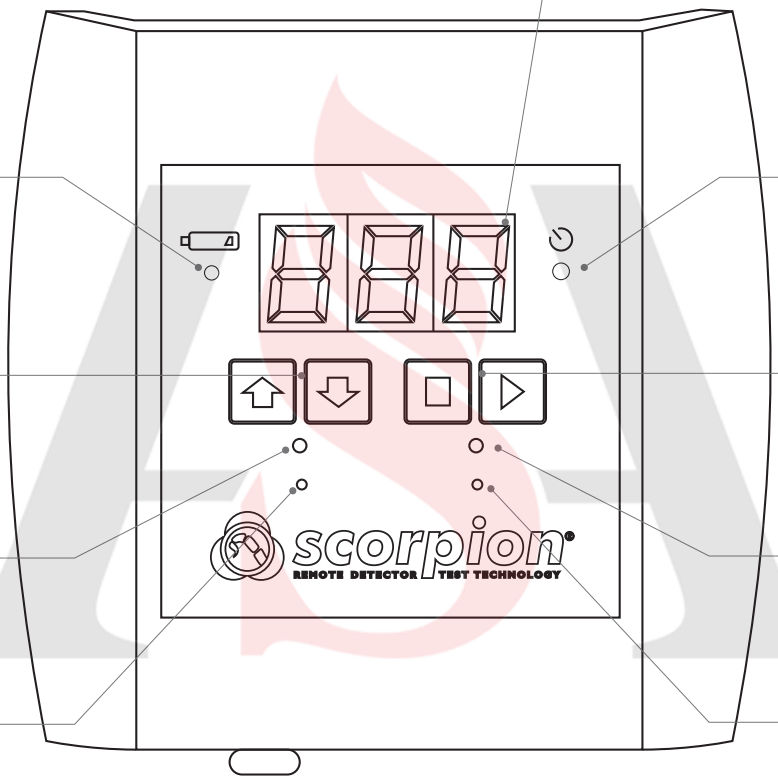

Battery Status Indicator

Glows Red up when battery power is low. Glows Green when battery level is ok.

Time Indicator

Lights up when timer is active. The display then indicates the time since smoke generation and/or clearing cycle started.

Up & Down Buttons

Used to select Scorpion Head Unit or adjust timer.

Run/Stop Buttons

Used to start or stop a test. Press for 3 seconds to activate or deactivate timer

Smoke Test Indicator

Test cycle in progress.

Clearing Indicator

Clearing (detector purging) in progress.

Smoke Time Button

Press and hold with small pointed tool to change smoke duration.

Clearing Time Button

Press and hold with small pointed tool to change clearing time.

www.asafire.ir

www.asafire.ir

5 INSTALLATION

5.1 HEAD UNITS

⚠ CAUTION

The Head Unit contains a liquid fuel, and is suitably sealed during transportation. Care must be taken during installation to prevent the fuel from leaking (the fuel is not harmful) - see the Safety Data Sheet (SDS) for more information.

Ensure that the head unit is kept level (+/- 15° from horizontal once fitted onto the bracket). Do not repeatedly press the yellow fuel release valve. Failure to do this could result in the fuel leaking out.

Scorpion Head Units and Mounting Brackets are differentiated by their colour; white for Point Detectors and red for ASD Systems (one part).

Both Head Units have a similar specification but their mounting brackets are different.

Please ensure you have the correct Head Unit and fittings for the application.

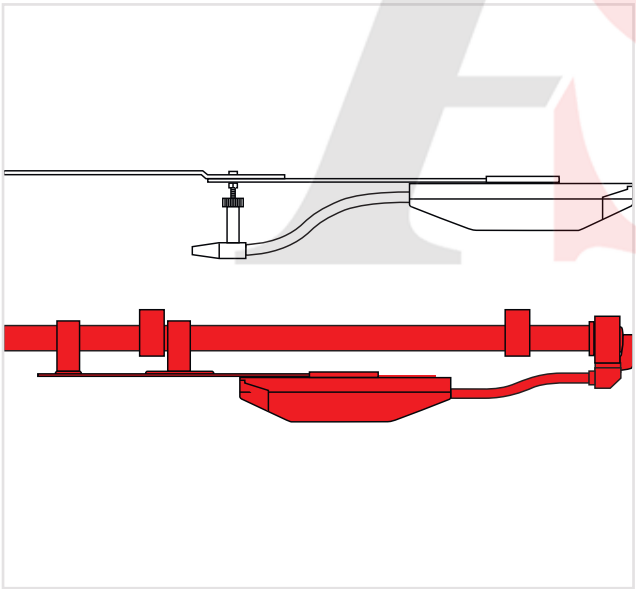

NOTE:
There are alternative ways of installing the Scorpion Head Units depending on the individual site situation.

It is very important that whichever way you adopt to install Scorpion, the head unit must be maintained horizontal and with the label facing upward's. This will prevent any accidental leakage of the liquid fuel.

5.2 HEAD UNIT WIRING

The wiring procedure is the same for both Scorpion Point and Scorpion ASD Head Units.

1. Remove the terminal cover by squeezing and gently pulling. Loosen the cable clip and rotate 90°.

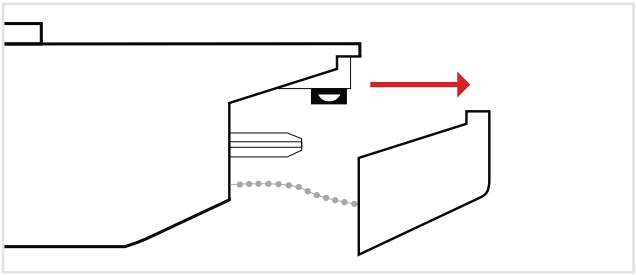

2. To connect the cable, strip the sleeve back by approximately 10mm then push the conductor into the same lettered terminal as used on the Control Panel (see Section 5.9), or follow the numbers for the Access Point (5.8).

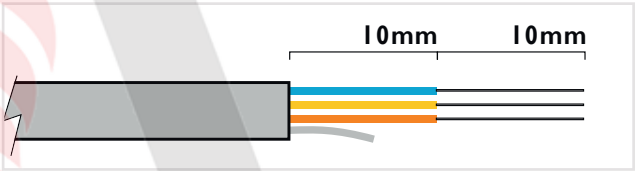

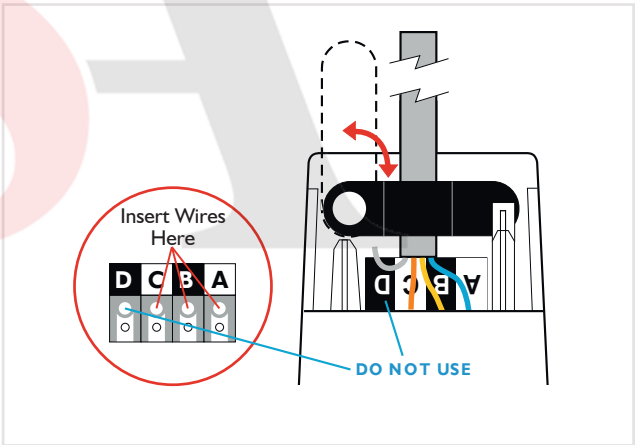

3. Rotate the cable clip back over the cable and under the retaining pin. Re-tighten the screw. A suitable cable tie can also be used to secure the cable to the Head Unit.

4. If necessary, enlarge the cable entry cut-out to suit the cable diameter and re-fit the terminal cover.

5. To remove the cable, latch the two prongs of the cable removal tool under the connector. Push upwards and pull the cable out.

www.asafire.ir

www.asafire.ir

5.3 CABLING

1. Scorpion can be connected using the following cables to give up to 100m distance between the Control Panel and each Head Unit:

A. Fire resistant cables such as FP200 1.5mm^2, Lapp J-Y(ST)Y 0.5mm^2, or equivalent recommended
B. Maximum conductor size is 1.5mm2, minimum is 0.5mm^2. Solid core
C. 4-core cable required
D. Screened cable is not required.

Cable cross section (mm^2)	Smoke time	Maximum cable length
1.5	15 Seconds	100m
1.0	15 Seconds	100m
0.5	30 Seconds	75m

2. The connector used in the Head Unit is intended for solid -core conductors for ease of installation in difficult areas. Stranded cable may be used but would need to be tinned (soldered) or terminated with a suitable terminal (ferrule) with an external diameter no greater than 1.5mm.

3. Each Head Unit requires three (3) conductors (A, B & C). 4-core cable is recommended with the fourth core cut and not connected at either end.

4. Cabling must be installed in accordance with local wiring regulations. Scorpion uses battery power (nominal 7.2V, 2.2Ah or 3.0Ah) depending on Solo battery baton type (Solo 760= 2.2Ah, Solo 770=3.0Ah)

⚠ WARNING

This product may be used at height. Exercise great care and always wear appropriate PPE (personal protective equipment) when operating above head height in order to avoid the risk of injury.

5.4 POINT HEAD INSTALLATION

- The Scorpion Point Head Unit is located beside a point detector with the 'forked' end of the mounting bracket inserted above the detector (or its base) and flush with the ceiling. For installation on sloping ceilings, the mounting bracket will need to be bent to keep the Scorpion Head Unit horizontal to prevent the leakage of fuel (see Section 5.1).

- Where the air is relatively still (e.g. away from air conditioning, doors, etc) then the Head Unit can be positioned on any convenient side of the detector.

- In drafty locations, the head unit must be positioned 'upwind' of the detector so any air flow will blow the Scorpion smoke towards the detector. If there is too much air flowing across the Scorpion nozzle, then it is possible that the smoke will not reach the detector and the detector may not activate.

- The smoke presenter can be adjusted by sliding the bracket horizontally towards or away from the detector to which it is fixed, and vertically by unplugging the flexible tube from the nozzle and rotating the nozzle until it aligns with the detector opening.

NOTE:
The flexible tube must be re-fitted after adjustment.

www.asafire.ir

www.asafire.ir

NOTE
It is advisable to connect the cables to the Head Unit before proceeding (see Section 5.2).

1.

Loosen the detector mounting screws enough to allow the forked end of the bracket to be inserted between the detector base and the ceiling (**A**).

Join the two sections of the point mounting bracket by inserting the lug into the slot (**B**).

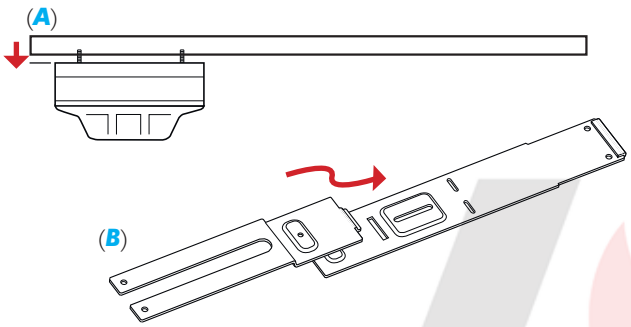

2.

Using the smoke presenter as a guide, select the screw (25mm 35mm, or 70mm) that allows the presenter to line up with the detector chamber opening.

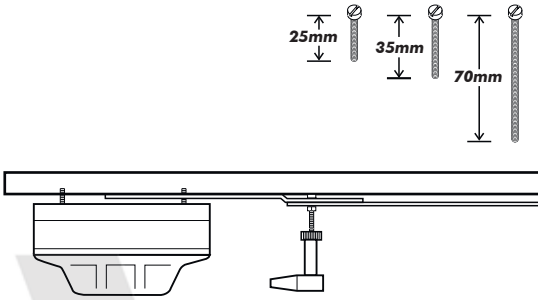

3.

Secure the two sections of the bracket with the screw and nut, then attach the smoke presenter and its locking nut.

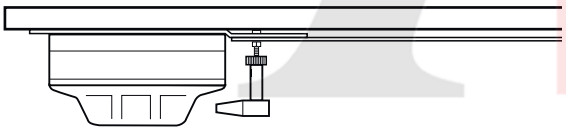

4.

Adjust the smoke presenter nozzle so that it aligns with the detector air openings (**C** & **D**) and is approx. 5-10 mm from the detector (**E**).Re-tighten the detector screws, ensuring the complete assembly is secure.

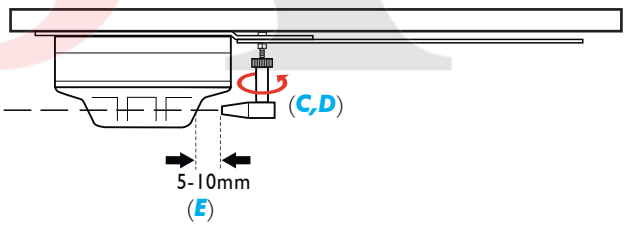

5.

Slide the head unit onto the bracket as far as it will go.



6.

Finally, attach the flexible tube by pushing it firmly into the head unit and the smoke presenter. It may be necessary to trim the tube to ensure a tight fit.

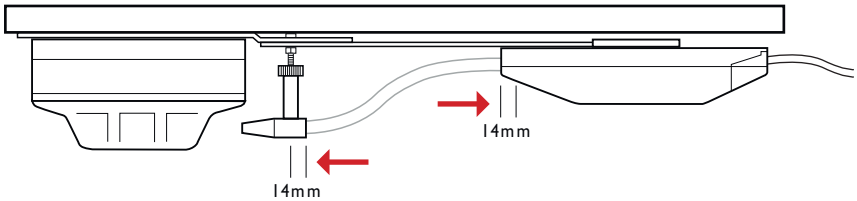

www.asafire.ir

www.asafire.ir

5.5 POINT HEAD UNIT INSTALLATION DO'S AND DONT'S

NOTE
These apply to all makes and sizes of Point detector. Adjustments should be made to ensure smoke enters the detector chamber correctly.

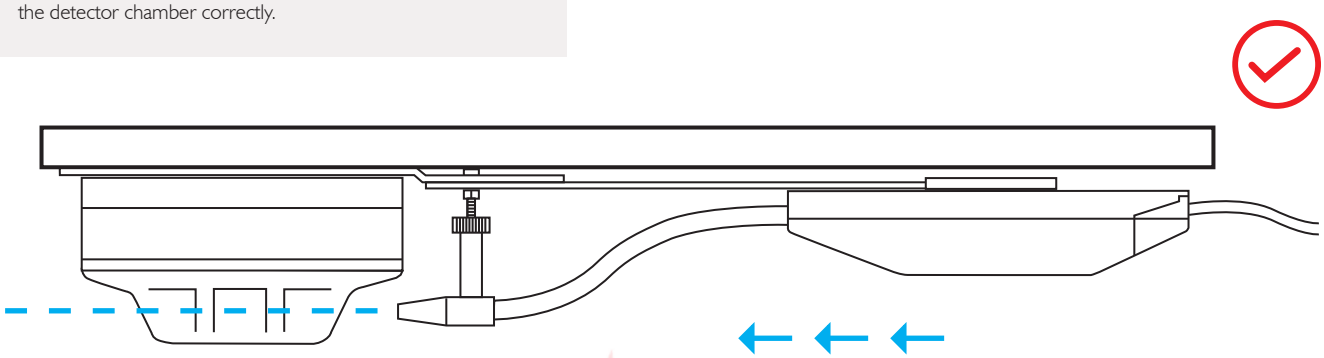

Smoke is blown through the detector chamber.

Direction of ambient air flow

With a sloping ceiling, the bracket should be bent and the pipe shortened so that the Head Unit remains horizontal.

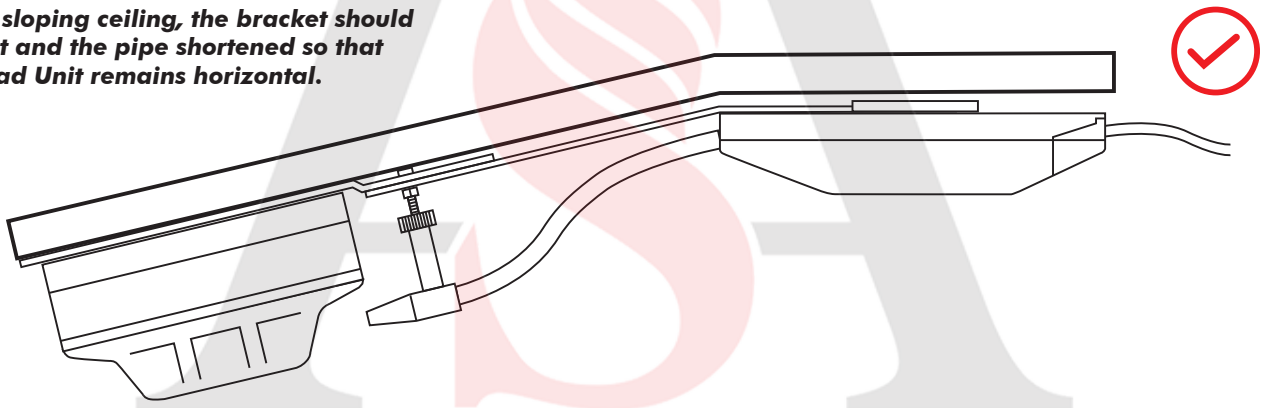

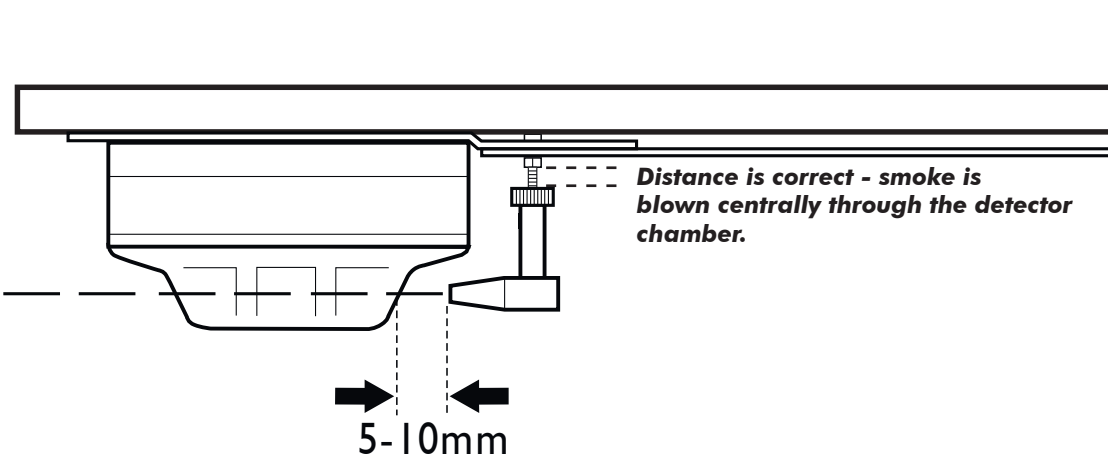

Distance is correct - smoke is blown centrally through the detector chamber.

www.asafire.ir

www.asafire.ir

Smoke is blown away from the detector chamber.

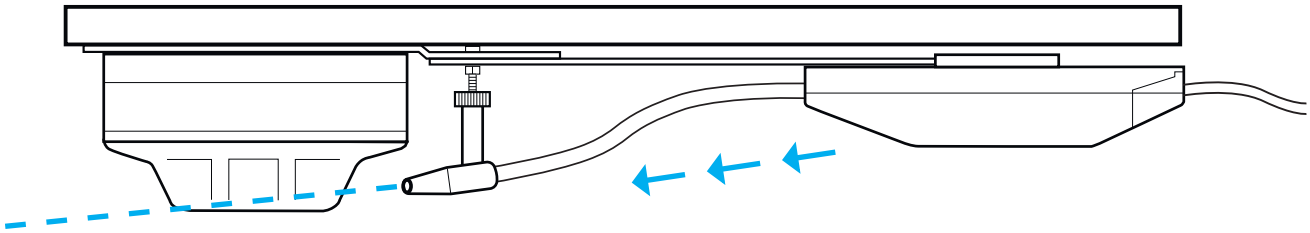

Direction of ambient air flow (crosswind - e.g. from air conditioning, open windows or doors etc.).

Always keep the head unit horizontal.

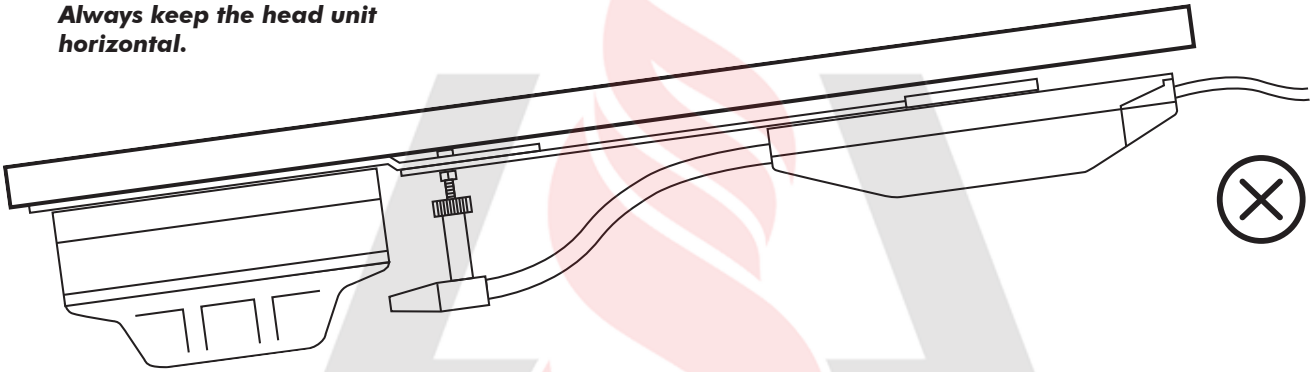

Distance is too large or too small causing smoke to be blown under or around the detector.

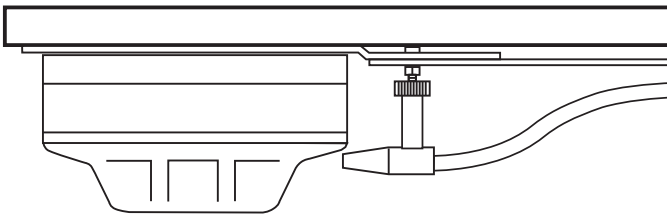

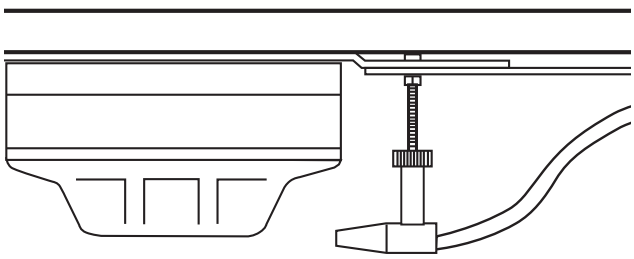

www.asafire.ir

www.asafire.ir

5.6 ASD HEAD UNIT INSTALLATION

- The Scorpion Head Unit is usually fitted to the end of a standard ASD pipe (not supplied) using the clips and smoke presenter provided.
- The Scorpion Head Unit can also be located adjacent to an air sampling hole along the length of an ASD pipe using the sampling hole presenter.
- Ensure that the Scorpion smoke presenter is a tight fit on the pipe or pipe end cap and the presenter does not obstruct the air sampling hole.

NOTE
It is advisable to connect the cables to the Head Unit before proceeding (see Section 5.2).

www.asafire.ir

www.asafire.ir

1.

Attach either the end cap presenter (**A**) or the sampling hole presenter (**B**) to the ASD pipe as applicable. Use the double sided self- adhesive pads provided or a suitable glue, to secure the presenter to the end cap or pipe.

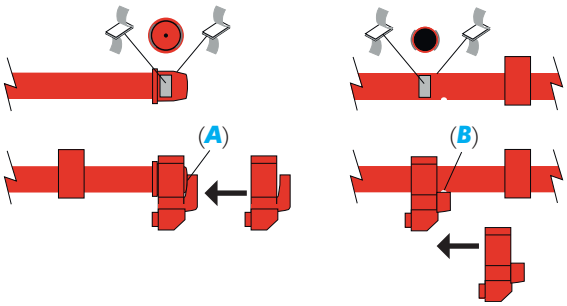

2.

Attach the flexible tube by pushing it firmly into the smoke presenter.



3.

Attach the head unit and bracket assembly to the pipe but do not lock the pipe clips at this stage to allow for adjustment.



4.

Slide the head unit on to the bracket as far as it will go.

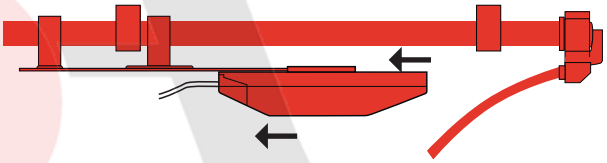

5.

Attach the flexible tube by pushing it firmly into the head unit and the smoke presenter.

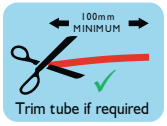

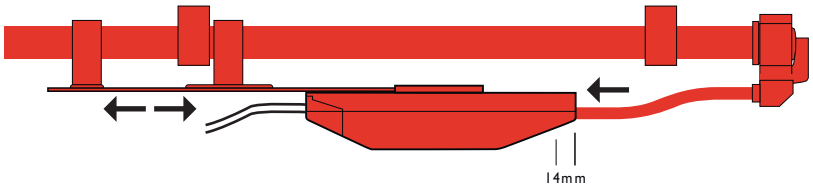

6.

Finally, lock the pipe clips to secure the Scorpion bracket to the ASD pipe by squeezing the pipe and bracket as shown.

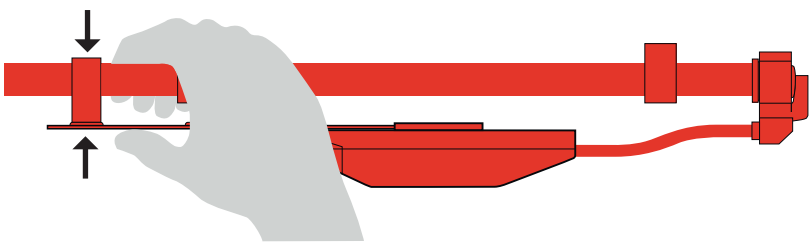

www.asafire.ir

www.asafire.ir

5.7 ASD HEAD UNIT INSTALLATION DO'S AND DONT'S

NOTE
Scorpion should ideally be mounted adjacent to the furthest hole from the ASD detector.

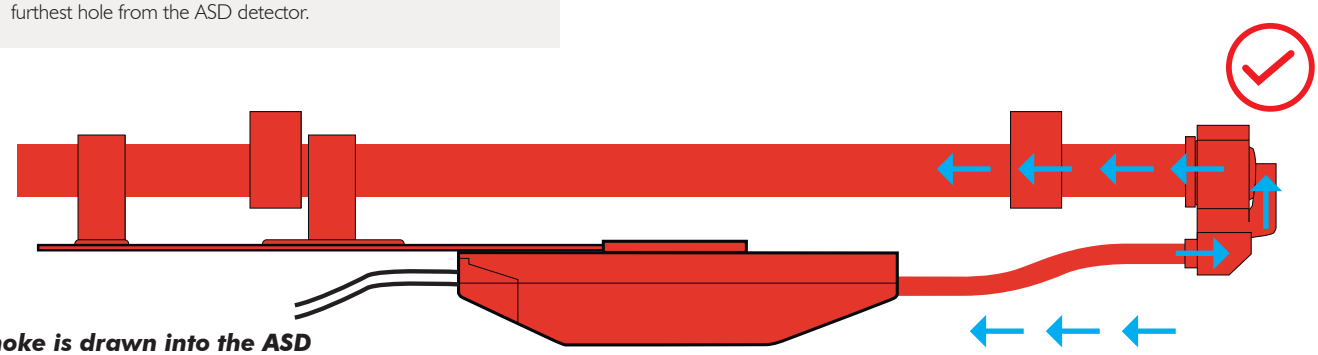

Smoke is drawn into the ASD pipe end cap sampling hole

Direction of ambient air flow

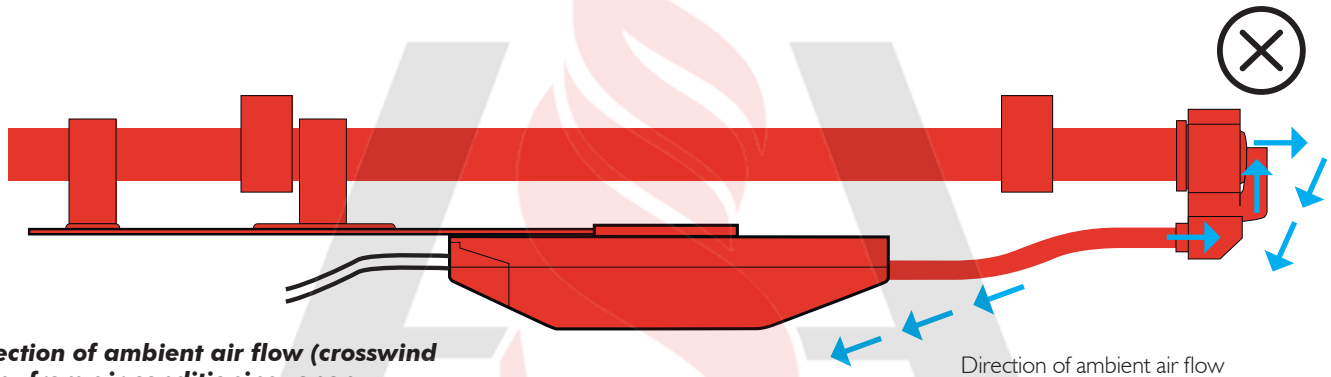

Direction of ambient air flow (crosswind - e.g. from air conditioning, open windows or doors etc.)

Direction of ambient air flow

With a vertical ASD pipe, the mounting bracket should be bent so that the Head Unit remains horizontal. Some "improvisation" may be required in these situations.

A longer smoke pipe may be required or the Head Unit may need to be attached to an adjacent structure. Use commonly available PVC tube with an inner diameter of 6mm, and outer diameter of 9mm.

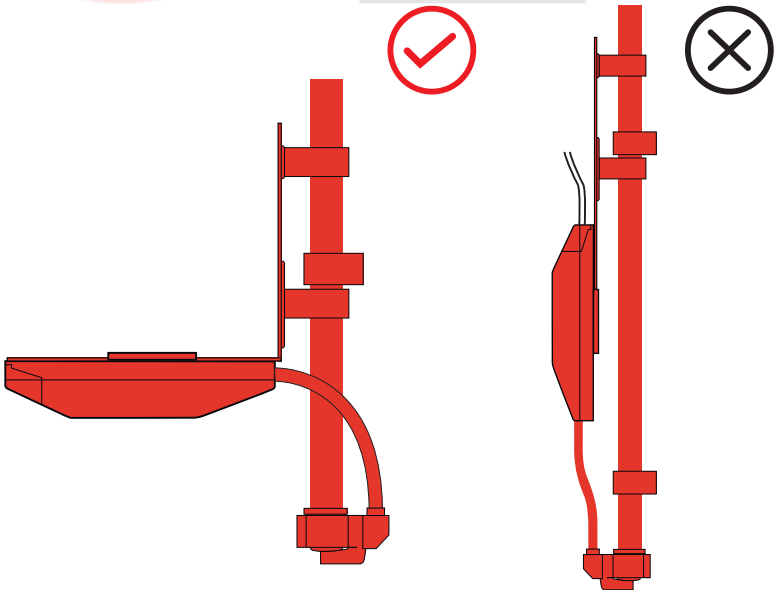

www.asafire.ir

www.asafire.ir

5.8 ACCESS POINT INSTALLATION

1. Fix the pattress box provided in a suitable location.
2. Cabling for the Access Point can either be run inside a cavity wall or can be run in conduit on the outside of the wall.
3. Feed the cables through the break-outs in the pattress box.
4. Connect the cables to the screw terminals on the connector, noting the wire colours used. The opposite end of the cable is connected to the head unit as shown. (Note: Applies to both ASD and Point Head Units).

NOTE
Incorrect wiring may lead to damage to either the Controller or the Head Unit. See Troubleshooting.

Scorpion Access Point (SCORP25-001)	Scorpion Head Unit (SCORP1001-001) or (SCORP2001-001)
Terminal 1	Terminal A
Terminal 2	Terminal B
Terminal 3	Terminal C

NOTE
The fourth wire (***G***), (***D***) should be cut and not connected at either end.

Control Panel/Access Point
Wire Strip Lengths

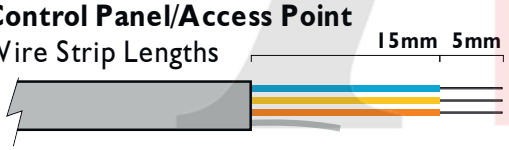

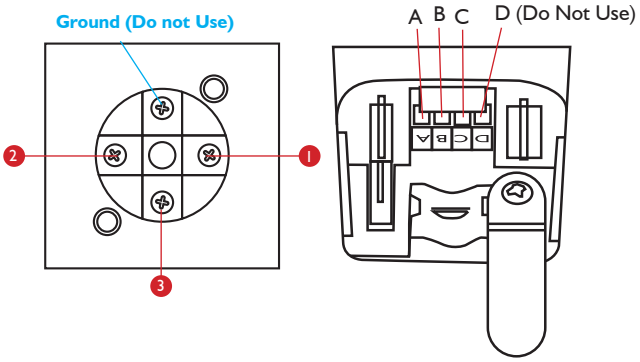

5.9 WALL CONTROL INSTALLATION

1. The Control Panel is fixed using the two M5 slots in the rear of the box.
2. Cabling for the Control Panel can either be run inside a cavity wall with an exit hole directly behind the Control Panel, or can be run in conduit on the outside of the wall. If using conduit, the optional spacer box must be used to allow cable access to the sides of the panel.
3. Undo the two small screws at the top of the panel and carefully remove the front face, taking care not to pull the cable between the two parts.
4. Connect the cable for each Head Unit to the appropriate screw terminals (marked CH1 to CH8) on either side of the rear entry slot. Note which colour wires have been used for each terminal (marked A, B, C, and D). These will connect to the corresponding terminals in the Head Unit. If using 3-core cable, connect to terminals A, B, and C only. If using 4-core cable, trim the 4th cable and do not use terminal D.
5. Tighten the screws on the terminals.

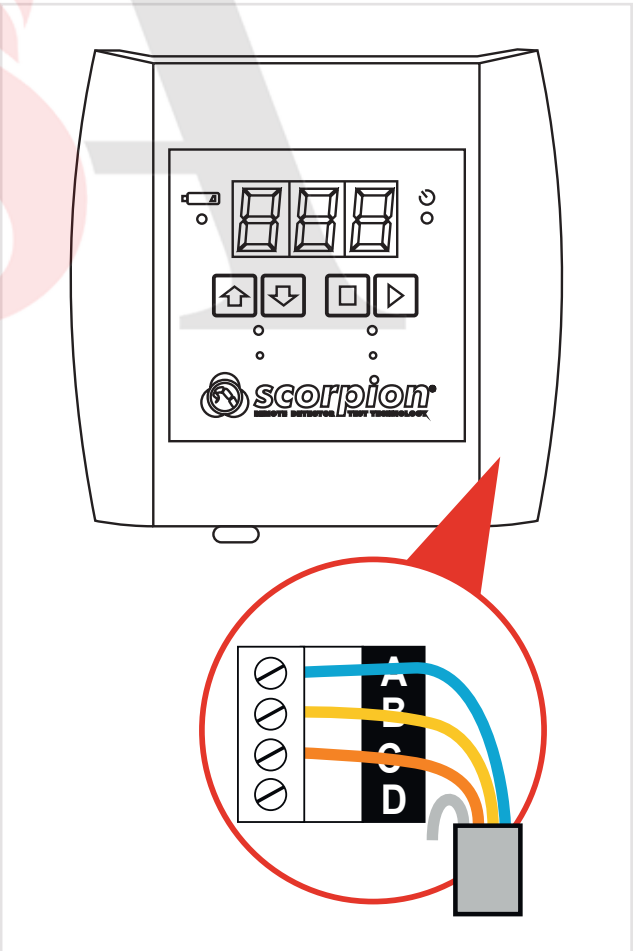

www.asafire.ir

www.asafire.ir

6 USING SCORPION

6.1 CHARGING THE BATTERY

⚠ WARNING

Do not attempt to use or charge the battery if either the unit or the battery connection point are damaged. Never connect AC and DC power at the same time.

⚠ CAUTION

Store charger in a dry place (indoor use only when connected to AC mains). Danger of fire and electric shock! Do not fast-charge a hot battery, allow the Battery Baton to cool down naturally before starting a charge cycle. Allow the charger to cool down for at least 15 minutes after one fast charge. Stop charging if the Battery Baton becomes too hot during charging (>55-60°C). Do not leave unattended whilst charging. Only clean with a dry cloth. Do not attempt to open the charger. Repair permitted only by authorised dealer.

Battery Batons must be stored and charged in accordance with stated environmental conditions.

Environment:
Operating temperatures: 5°C to 45°C / 41°F to 113°F
Storage temperature: -10°C to 50°C / 14°F to 120°F
Humidity: 0-90% RH non-condensing

Only the Solo charger should be used for charging Solo Battery Batons. Do not connect other types of batteries. Danger of explosion.

- Solo Battery Batons are used to power the Scorpion System, and must be charged before using Scorpion.
- Connect the Solo charger to a mains power outlet (100/240V – 50/60Hz) or 12 volt vehicle accessory socket.
- Connect the Solo Battery Baton to the charger via the seven pin polarised connector and turn the locking ring.
- The LED will flash from red to green for around 5 minutes whilst the battery status is checked. The LED will then turn to red to indicate fast charging, unless the battery is fully charged, in which case it may go directly to green (ready for use).
- After fast charging is complete (90 minutes for a fully charged battery), the charge is automatically converted to a trickle charge and the LED turns to green (ready for use).
- A red flashing LED indicates a faulty battery. Disconnect the battery from the charger and replace with a new battery.
- To stop charging, disconnect the power plug before removing the battery from the charger.
- To obtain the maximum battery life, the Solo Battery Baton should be fully discharged before recharging when possible

NOTE
If the battery is not to be used for some time (i.e. within the next day), it is advisable to unplug the charger from the power supply.

6.2 CONNECTING THE BATTERY

- When using a Solo Battery Baton, a Scorpion Battery Cable (SCORP 60) is required to connect the battery baton to the Scorpion Portable Controller or Wall Mounted Controller.
- Insert the connector at the end of the battery cable to the socket at the bottom of the Scorpion Portable Controller or the Wall Mounted Controller. The connectors need to be aligned before they can push together. Once inserted, twist the collar on the battery socket clockwise to lock the battery into place.
- To remove the battery, twist the collar anti-clockwise to unlock, then pull gently to disengage.

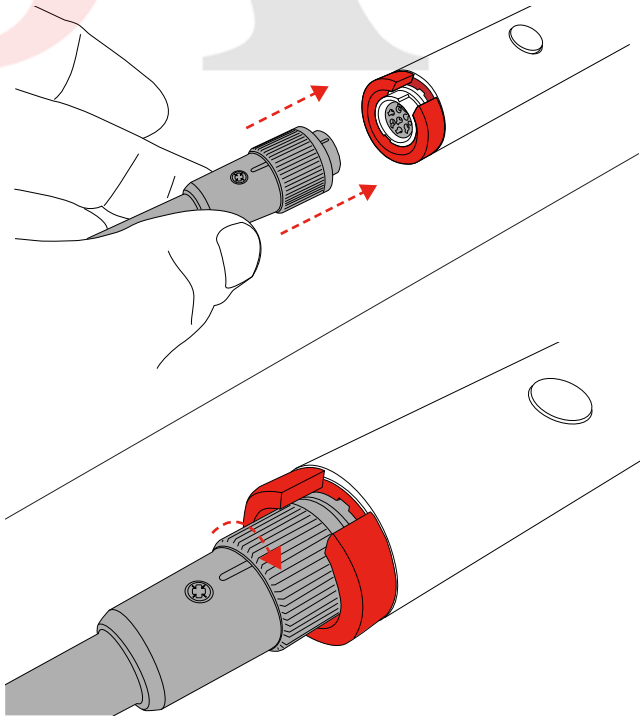

www.asafire.ir

www.asafire.ir

6.3 SMOKE & CLEAR TIMES - PORTABLE CONTROLLER

1.
Connect the battery and switch the Controller on

- Press and hold the power button
- The display shows the firmware version, then goes blank.

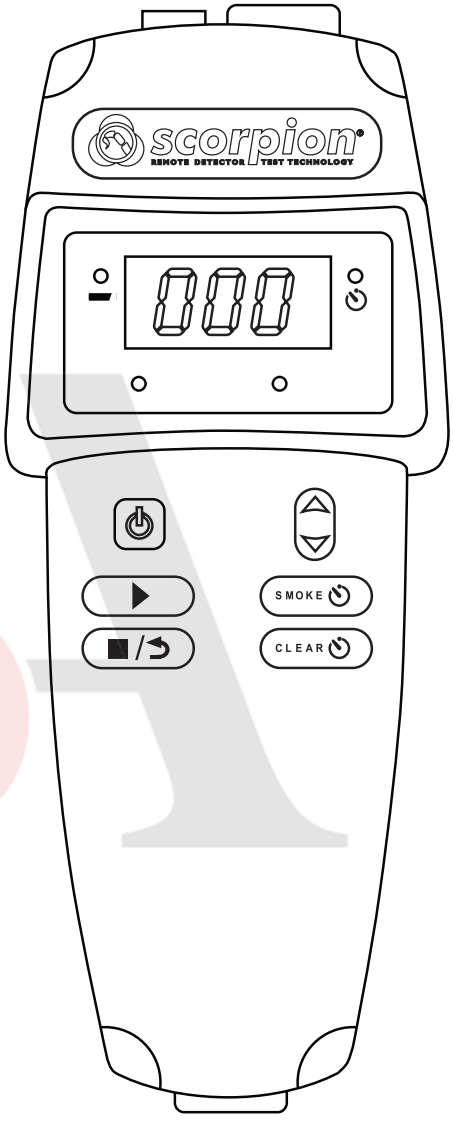

2.
Setting Smoke and Clear times (If required)

The time that is required for smoke (the time for which smoke is generated) and clear (ambient air is blown through the detector chamber) can be changed depending on the system activation time.

Smoke (default time is 15 seconds)
Clear (default time is 15 seconds)

3.
To change the default times, press the relevant smoke time or clear time button. The display will show the previously set (or default time) and the Smoke or Clear status light will flash.

Press the up and down buttons until the time required is shown. Press the smoke time or clear time button again to save the time and exit.

Smoke - time range is 5 to 90 seconds
Clear - time range is 10 to 60 seconds

4.
The time is now set and is saved in the Controller for future use. To exit without saving the times, press the Stop / Exit button.

NOTE
The clear function is used to purge smoke from the detector to enable it to reset more quickly. It cannot be used to clean the internal components of the detector. Always use the least amount of smoke required to activate the detector.

www.asafire.ir

www.asafire.ir

6.4 TEST & CLEAR TIMES - WALL MOUNTED CONTROLLER

The time that is required for test (the time for which smoke is generated) and CLEAR (ambient air is blown through the detector chamber) can be changed depending on the system activation time.

Test (default time is 15 seconds)
Clear (default time is 15 seconds)

1.

Press and hold the relevant test or clear button with a small blunt tool. The corresponding LED will start to flash.

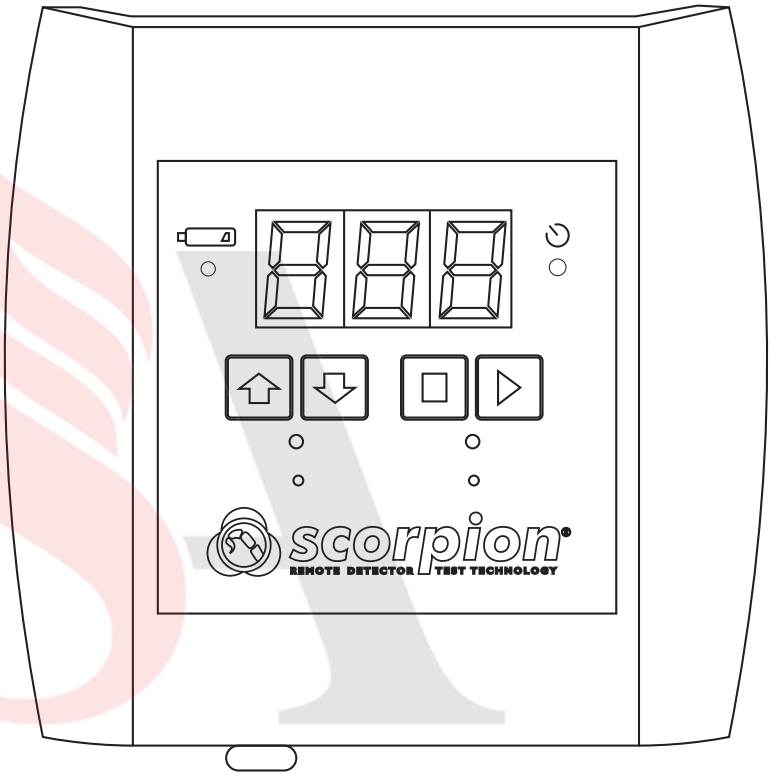

2.

Press the up button to increase the time or the down button to decrease the time. The time is shown on the display.

Test - time range is 5 to 90 seconds
Clear - time range is 10 to 60 seconds

3.

When the required time is shown, release the test or clear button. The time is now set and is saved in the Control Panel for future use. This time is used for all the Head Units connected to that panel.

NOTE

The clear function is used to purge smoke from the detector to enable it to reset more quickly. It cannot be used to clean the internal components of the detector.

www.asafire.ir

www.asafire.ir

6.5 ENABLING THE TRANSPORT TIMER

- The Transport Time is used in ASD systems, and is the time taken between the start of smoke generation and the event appearing on the ASD panel.
- The Timer is activated / deactivated by pressing and holding the stop button for 3 seconds (both Controllers).
- The Timer Indicator LED flashes fast 3 times to show the timer has been activated, and flashes slowly for 3 times when deactivated.
- During a test cycle, the Timer Indicator LED is illuminated and the display shows the time since the start of smoke generation (counting up).

6.6 PORTABLE CONTROL TEST PROCEDURE

- Connect the Portable Controller to a Scorpion Access Point wired to the Head Unit (Detector) under test using the Scorpion Control Cable (SPARE 1054).
- Switch the Controller on.
- "C" on the display implies that either the Control Cable is not connected properly, or that an incorrect cable is being used.
- Press the start button to begin the test.
- The test will run based on the default times set for smoke and clear unless changed. The LED indicators on the front panel illuminate to show the stage of the test i.e. smoke or clear. Once the test has been completed, the system will stop automatically.
- If a manual stop is needed, then press the stop button.

6.7 WALL CONTROL TEST PROCEDURE

- Select the head to be tested using the up and down buttons (head number is shown on the display). The Control Panel will allow selection of up to 8 heads, even if no head is connected to that port.
- Press the start button to begin the test.
- The test will run based on the times set for test and clear (using the recessed buttons). The LED indicators on the front panel illuminate to show the stage of the test i.e. smoke or clear. Once the test has been completed, the system will stop automatically.
- If a manual stop is needed, then press the stop button

6.8 WARNINGS AND ERRORS

- **Battery Status Indicator** - Glows red when battery level is low. Glows green when the level is ok. Tests cannot made when the LED glows red and the battery will need to be recharged.
- **Error** - Three flashing points on the display indicate that a fault has occurred and the Control Panel fuse has blown.
- Scorpion has a clearing function that blows air through the detector to clear the smoke more quickly. This is part of the standard test profile (unless stopped manually). If the alarm keeps sounding, the clearing time may not be long enough and can be increased.
- For future tests, try reducing the smoke time to lessen the amount of smoke in the detector chamber.

www.asafire.ir

www.asafire.ir

7 TROUBLESHOOTING

Scorpion not working

Is the Controller / Panel ON (are any lights on?)

No — Ensure battery is fully charged and properly plugged in. Ensure Portable Controller is switched on.

Yes

Is Battery Status LED glowing red?

No — Ensure battery is fully charged, or try another battery.

Yes

Does display show anything?

No — If display shows flashing points, this indicates a fault has caused the internal fuse to blow. Check circuit and replace fuse. 'C' indicates a fault with the yellow Control Cable.



Yes

Is the correct port selected?

No — The Controller does not detect the presence of a head, so will still allow a "test" to be run on an unused port. Ensure the patch cable is connected at both the Portable Controller and Access Point. Ensure the correct head is selected on the Wall Mounted Control Panel.

Yes

Is smoke coming out of the head nozzle?

Yes — Scorpion is then working. Check the alignment of the smoke nozzle with the detector (smoke going into detector) (Section 6), increase the smoke time (Section 7.3) to activate your detector, or follow the detector's troubleshooting guide.

No — Is a light visible through the mesh in the head?

No — Check that the wiring from the Access Point / Control Panel to the Head Unit is correct, conductors are properly in the terminals, conductors are not broken, and cable is within CSA and length specification.

Yes — Is the Head Unit mounted correctly ?

No — Refer to Section 6. Check Head Unit is horizontal, breather plugs (top and nose) removed, tube connected, no blockages?

Yes — Replace the Head Unit

Portable Controller







At this stage, the Portable Controller looks like it is working correctly.

Wall Mounted Controller

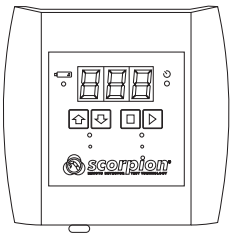





At this stage, the Wall Mounted Controller looks like it is working correctly.

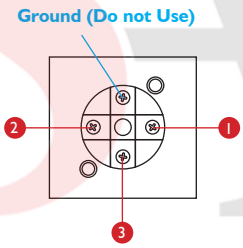

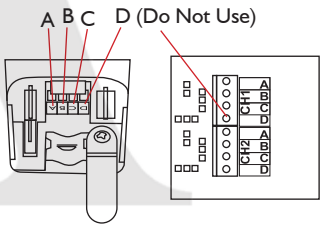

Control panel CH1 connects to head 1, display = '1' check correctly wired

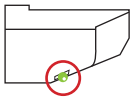

www.asafire.ir

www.asafire.ir

8 SERVICE & MAINTENANCE

8.1 HEAD UNITS

- There are no user serviceable parts in the Scorpion Head Unit which is permanently sealed.
- Any attempt to open or tamper with the Scorpion Head Unit will invalidate any warranty or liability with No Climb Products Ltd.

NOTE
The Head Unit is designed to be permanently installed providing in excess of 240 tests of 15 seconds each

8.2 CONTROLLERS

- The Portable Controller contains a 500mA fuse (5 x 20mm cartridge type) which can be replaced if necessary.
- The Control Cable (yellow) can be replaced using Part No. SPARE 1054-001.
- The Wall Mounted Control Panel contains a 500mA fuse (Littlefuse Omni-Block 500mA Farnell Part No. 9943625, or equivalent) which can be replaced if necessary. One spare fuse supplied with each Control Panel.
- There are no other user serviceable components in the Portable Controller or the Wall Mounted Control Panel.

8.3 BATTERIES & BATTERY CHARGER

- There are no user-servicable parts in the Solo Battery Baton or in the Solo Charger.
- Any attempt to open or tamper with the batteries, charger, or any other Scorpion (or Solo) component will invalidate any warranty or liability with No Climb Products Ltd.

Disposal of old product
See WEEE statement

www.asafire.ir

www.asafire.ir

9 TECHNICAL SPECIFICATIONS

	Scorpion Head Unit	Scorpion Controllers
Transport / Storage Temperature	-10°C to 50°C (14°F to 122°F)	-10°C to 50°C (14°F to 122°F)
Storage Humidity	0-90% RH (non-condensing)	0-90% RH (non-condensing)
Operating Temperature	0°C to 60°C (32°F to 140°F)	+5°C to 45°C (41°F to 113°F)
Operating Humidity	0-95% RH (non-condensing)	0-85% RH (non-condensing)
Ingress Protection	IP20	IP40
Weights & Dimensions	<200g 155mm (W) x 54mm (L) x 34mm (H) (excluding nozzle)	<500g 100mm (W) x 225mm (L) x 40mm (H) (portable controller) <500g 155mm (W) x 150mm (L) x 37mm (H) (wall mounted controller)

NOTE:
The Scorpion system is designed for specific applications within the above parameters. For additional information regarding location and installation procedures, please refer to this User Manual and/or the Quick Start Guide.

Safety Features	• Scorpions energized only at time of test • Isolation between Scorpion circuit and detection system • Internal over-current protection on Scorpion circuit • Battery over-current cut-out
Power Source & Charge Data	• Solo Battery Baton - NiMH rechargeable nominal 7.2v 2.2Ah or 3.0Ah • Charging time 75 - 90 minutes (when completely discharged) using a Solo charger • Solo Battery Charger (Solo 727) - Input: 100-240V AC / 50/60 Hz / 0.44A : 13.8V DC 1.8A - Output: 8.4V DC 2A FAST : 8.4V DC 100mA TRICKLE
Service Intervals	• None required • Scorpion Head Unit sealed for life (no serviceable or field replaceable parts) • Scorpion Portable and Wall Mounted Controllers contains a fuse
Cabling	• Maximum conductor size is 1.5mm2, minimum is 0.5mm2 • Solid core, or use ferule if standard • Maximum cable length per Scorpion Control Panel - 100 metres(1) • Maximum Scorpions per Access Point - 1 / per Wall Mounted Control Panel - 8
Testing Capacity	• In excess of 240 tests of 15 seconds each per Scorpion Head Unit

(1) Depends on cable used

www.asafire.ir

www.asafire.ir

10 TECHNICAL SUPPORT

For support, service and further information, please contact:

No Climb Products Ltd
Edison House, 163 Dixons Hill Road, Welham Green, Herts,
AL9 7JE, United Kingdom

Tel: +44 (0) 1707 282760 Fax: +44 (0) 1707 282777
Email: support@detectortesters.com

www.asafire.ir

www.asafire.ir

scorpion®
REMOTE DETECTOR TEST TECHNOLOGY

detectortesters
testing technology from No Climb

No Climb Products Ltd
Edison House, 163 Dixons Hill Road,
Welham Green Hertfordshire, AL9 7JE,
United Kingdom

Tel: +44 (0) 1707 282 760
Fax: +44 (0) 1707 282 777
Info@detectortesters.com

www.detectortesters.com/scorpion

As our policy is one of continuous improvement, details of products described within this publication are subject to change without notice. All information provided here is believed to be correct at the time of going to press. Every effort has been made to ensure the accuracy of information which is provided in good faith but nothing contained herein is intended to incorporate any representation or warranty, either express or implied or to form the basis of any legal relations between the parties hereto, additional to or in lieu of such as may be applicable to a contract of sale or purchase.

LI32344-8

www.asafire.ir